Drawing of Component

Litz cross section 0.75mm²

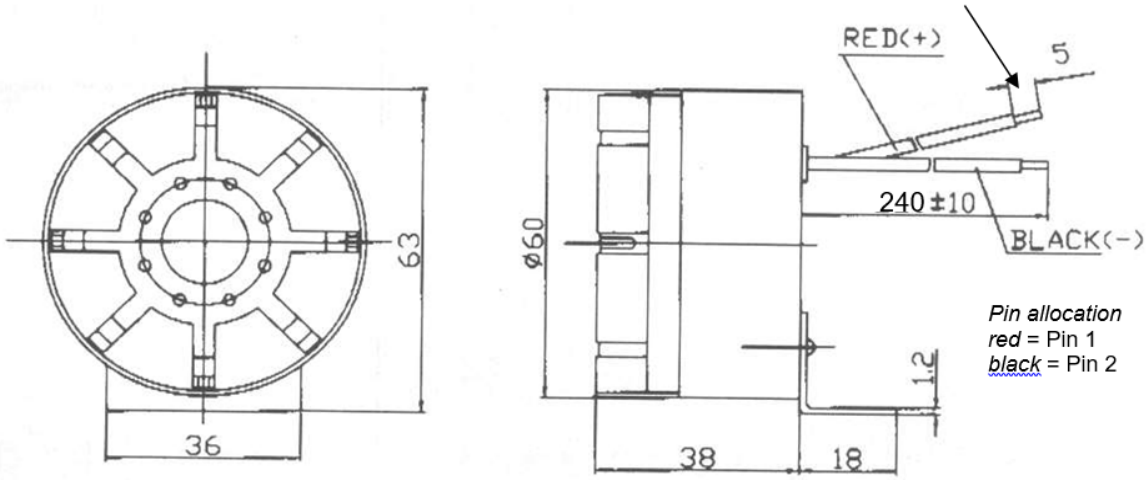

Pin allocation
red = Pin 1
black = Pin 2

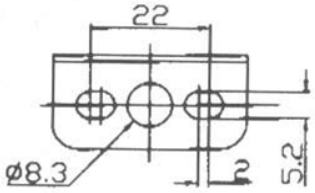

with Deutsch-connector:
Deutsch *Sleeve* part DT 2P-BT
Deutsch *housing* part DT 04-2P
Deutsch *bolting device* part W2P
Deutsch *Pin* part 0460-215-16141
Schlemmer *Endpart* part 9805940 NW4.5
Schlemmer *corrugated pipe* part 1927304 NW4.5
Länge *length* 200mm

Crimp adjustment of the Deutsch-Plears for 0.75mm² : Size 18

Copyright DIGISOUND-Electronic GmbH
All specifications are subject to change without notice